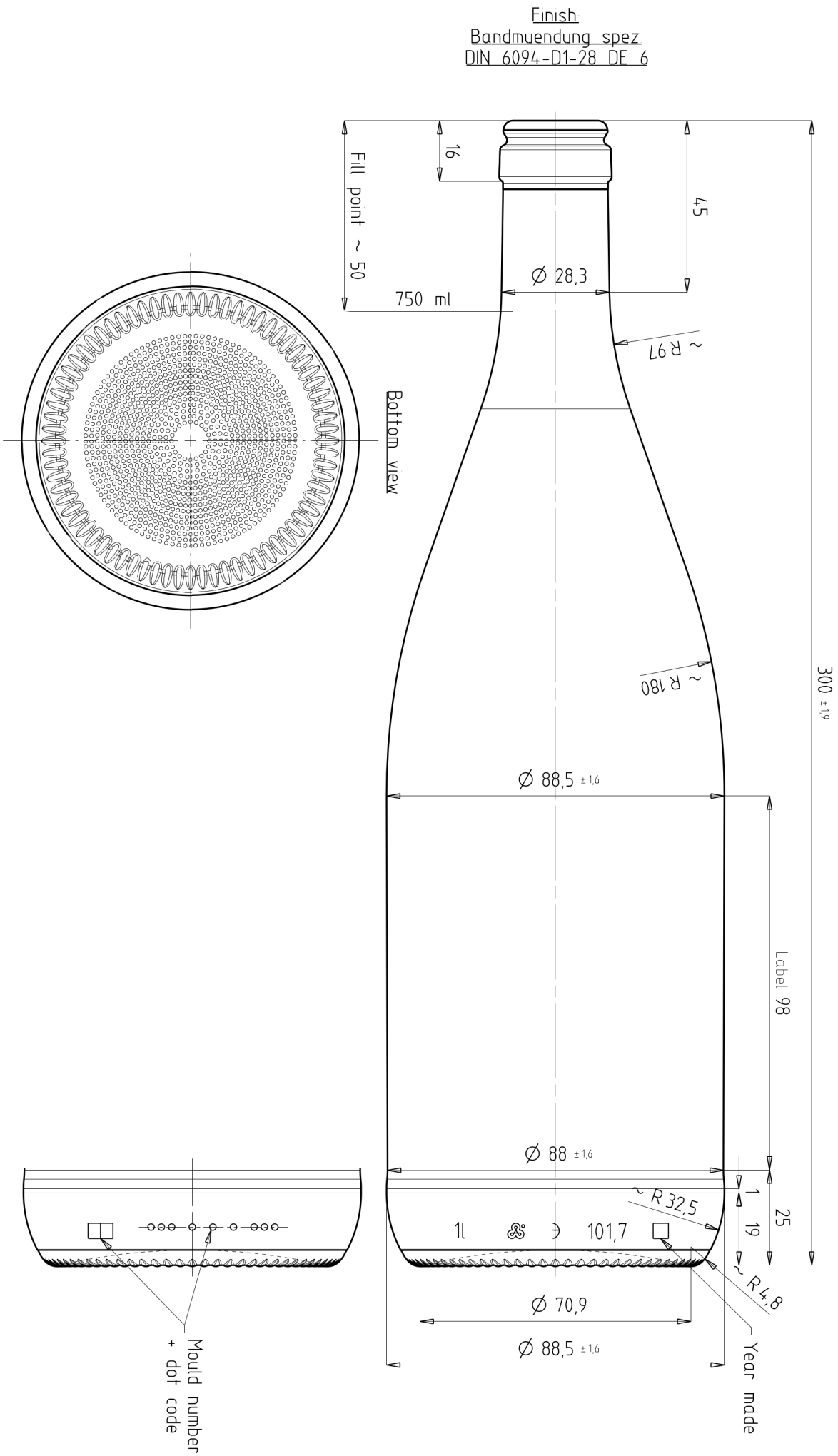

Burgunder BMS 1000